Rockwell Automation

CENTERLINE 2100
MOTOR CONTROL CENTER

PROJECT: INCONTROL – YPFB
MCC: TERMINAL SANTA CRUZ REV 3

REV	APPROVED	DATE	STAGE
A	C. SERNA	06–05–19	APPROVAL

PROJ. DOC. TYPE: COVER SHEET

PROJECT:
INCONTROL – YPFB
TERMINAL SANTA CRUZ REV 3

CUSTOMER:
INCONTROL S.R.L // NIT:196352027
0000518645
000000000035

ORDER–LINE NUMBER:
6504356403–000100

LANG: ENG

Rockwell Automation

ONE LINE COVER SHEET

DRAWN BY: C. SERNA

DATE: 29–MAY–19

CONFIDENTIAL AND PROPRIETARY INFORMATION.
THIS DOCUMENT CONTAINS CONFIDENTIAL AND PROPRIETARY INFORMATION OF ROCKWELL AUTOMATION, INC. AND MAY NOT BE USED, COPIED OR DISCLOSED TO OTHERS EXCEPT WITH THE AUTHORIZED WRITTEN PERMISSION OF ROCKWELL AUTOMATION INC.

SIZE D | 10004714120 | VER 00

RA_TB_NEMA_D_H_SAP–11/03/16
RA_TB_NEMA_D_H_SEMS–11/03/16

10004714120_0001

MOTOR CONTROL CENTER STRUCTURE SPECIFICATIONS

ENCLOSURE DATA

NEMA TYPE 1G ENCLOSURES
90" [2286] ENCLOSURE HEIGHT
20" [508] ENCLOSURE DEPTH
FRONT MOUNTED ENCLOSURE STYLE
ANSI 49 ENCLOSURE FINISH
TOTAL NUMBER OF SECTIONS 13
TOTAL NUMBER OF SHIPPING BLOCKS 9
MAIN CIRCUIT BREAKER

INCOMING POWER SYSTEM

WYE/3 PH/4 WIRE W/SOLID GRD NEUT POWER SYSTEM

400V POWER SYSTEM LINE VOLTAGE
50HZ POWER SYSTEM LINE FREQUENCY

CUSTOMER INCOMING CABLES ENTRY: BOTTOM

POWER BUS

1200A HORIZONTAL POWER BUS
HORIZONTAL POWER BUS MATERIAL IS COPPER
TIN HORIZONTAL POWER BUS PLATING
65000A RMS HORIZONTAL POWER BUS BRACING

VERTICAL POWER BUS MATERIAL IS TIN PLATED COPPER
AUTOMATIC SHUTTER VERTICAL BUS OPENING PROTECTION

GROUND BUS

0.25" X 2" [6.4] X [50.8] HORIZONTAL GROUND BUS
HORIZONTAL GROUND BUS IS UNPLATED COPPER
GROUND BUS LOCATED IN BOTTOM HORIZONTAL WIREWAY
VERTICAL GROUND BUS: PLUG-IN (CU)

EQUIPMENT GROUND LUG SIZE: #6AWG – 250 KCMIL
INCOMING GROUND CABLES: 2

NEUTRAL BUS

NEUTRAL BUS LOCATED BELOW MAIN BUS
NEUTRAL BUS RATING IS THE SAME AS MAIN BUS RATING

MOTOR CONTROL CENTER STRUCTURE SPECIFICATIONS

NEUTRAL CONNECTION PLATES IN HORIZONTAL WIREWAY

NEUTRAL CONNECTION PLATE IN SECTION BOTTOM WIREWAYS
05, 09, 11, 13

STANDARD 300A VERTICAL POWER BUS CABINET(S)

04, 05, 08, 09, 10, 11, 13

600A VERTICAL POWER BUS CABINET(S)

12

HORIZONTAL NEUTRAL BUS CABINET(S)

01, 02, 03, 04, 05, 06, 07, 08, 09, 10, 11, 12,
13

VERTICAL NEUTRAL BUS CABINET(S)

NONE REQUESTED

PULLBOX REQUIRED ON CABINET(S)

NONE REQUESTED

MOTOR CONTROL CENTER STRUCTURE SPECIFICATIONS

ENCLOSURE OPTIONS REQUESTED

MASTER NAMEPLATE REQUIRED WITH 3 LINES OF TEXT

BOTTOM PLATES
VERTICAL WIREWAY TIE-BARS

SPACE HEATER VOLTAGE: 240V
SPACE HEATER THERMOSTAT: 1 PER BLOCK

EXPORT PACKAGING REQUIRED

ArcSHIELD, ARC RESISTANT MCC
DEVICE LIMITED NOTE:
THIS MCC PROVIDES TYPE 2 ACCESSIBILITY PER IEEE C37.20.7
WHEN AVAILABLE SHORT CIRCUIT CURRENT ≤ 65kA AND
PROTECTED BY ONE OF THE FOLLOWING DEVICES:
UL LISTED FUSES
CLASS L –ANY FUSE ≤ 1200 A
CLASS R –ANY FUSE ≤ 600 A
CLASS J –ANY FUSE ≤ 600 A
UL LISTED MOLDED CASE CIRCUIT BREAKERS
ALLEN-BRADLEY –BULLETIN 140G, FRAME G, H, J, K, M, or N

MOTOR CONTROL CENTER COMMON UNIT OPTIONS

ACRYLIC STYLE UNIT NAMEPLATES
BLACK LETTERS ON WHITE UNIT NAMEPLATE COLOR
4 – LINES OF INFORMATION PER UNIT NAMEPLATE

IP ADDRESSES NOT PROVIDED ON NAMEPLATES
EXTERNAL OVERLOAD RESET BUTTONS
UNIT DIAGRAM LOCATION: CENTRAL

INTERWIRING: 1000_

NETWORK INFORMATION

NETWORK TYPE: ETHERNET/IP

ONE-LINE LEGEND

UNIT LOCATION: 01A
SCHEMATIC/DIAGRAM: 1000XXXXXXX

UNIT NAMEPLATE

CUSTOMER LOAD WIRE SIZE RANGE
GND/NEUT. WIRE SIZE RANGE

REV	APPROVED	DATE	STAGE
A	C. SERNA	06-05-19	APPROVAL

PROJECT:
INCONTROL – YPFB
TERMINAL SANTA CRUZ REV 3

CUSTOMER:
INCONTROL S.R.L // NIT:196352027
0000518645
000000000035

ORDER-LINE NUMBER:
6504356403-000100

PROJ. DOC. TYPE: SPECIFICATIONS SHEET
LANG: ENG

Rockwell Automation

SPECIFICATIONS SHEET

DRAWN BY: C. SERNA
DATE: 29-MAY-19

CONFIDENTIAL AND PROPRIETARY INFORMATION.
THIS DOCUMENT CONTAINS CONFIDENTIAL AND PROPRIETARY INFORMATION OF ROCKWELL AUTOMATION, INC. AND MAY NOT BE USED, COPIED OR DISCLOSED TO OTHERS EXCEPT WITH THE AUTHORIZED WRITTEN PERMISSION OF ROCKWELL AUTOMATION INC.

SIZE D | 10004714120 | VER 00

RA_TB_NEMA_D_H_SAP-11/03/16
RA_TB_NEMA_D_H_DEWS-11/03/16

10004714120_0002

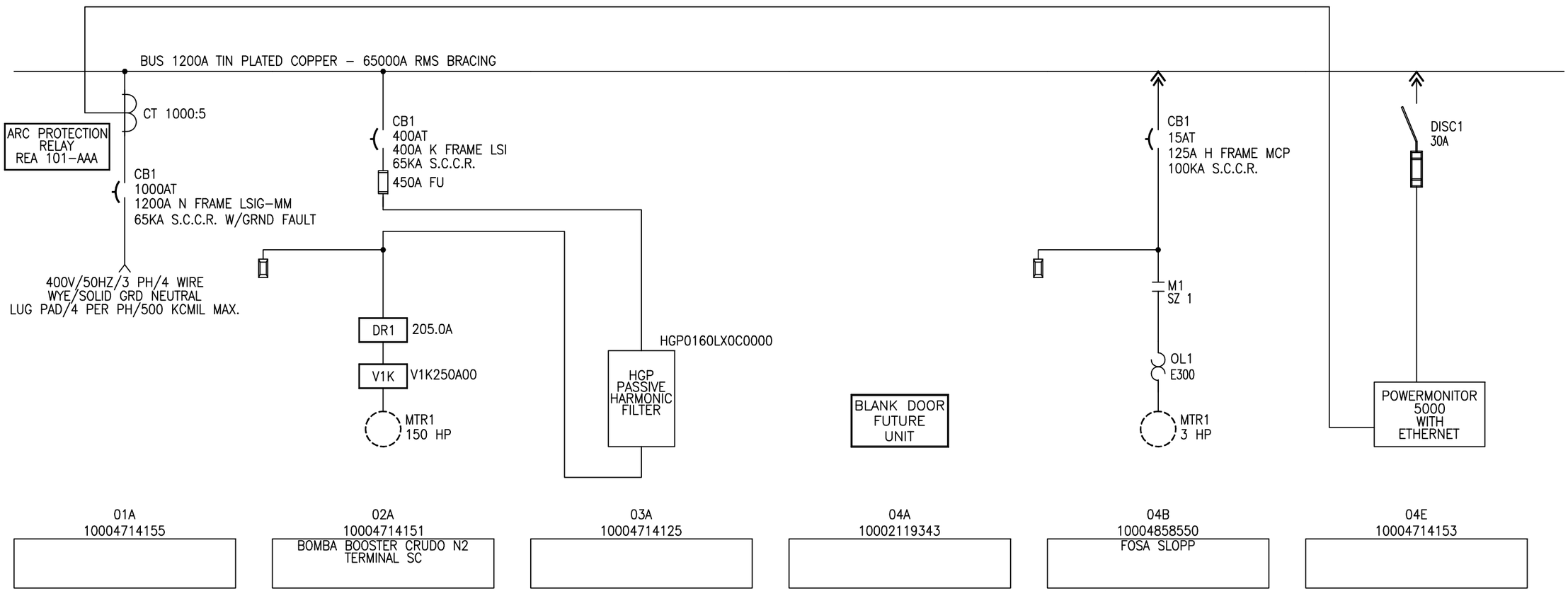

MASTER NAMEPLATE

REV	APPROVED	DATE	STAGE
A	C. SERNA	06–05–19	APPROVAL

PROJ. DOC. TYPE: ONE LINE

PROJECT:
INCONTROL – YPFB
TERMINAL SANTA CRUZ REV 3

CUSTOMER:
INCONTROL S.R.L // NIT:196352027
0000518645
000000000035

ORDER–LINE NUMBER:
6504356403–000100

LANG: ENG

Rockwell Automation

ONE LINE SCHEMATIC

DRAWN BY: C. SERNA

DATE: 29–MAY–19

CONFIDENTIAL AND PROPRIETARY INFORMATION.
THIS DOCUMENT CONTAINS CONFIDENTIAL AND PROPRIETARY INFORMATION OF ROCKWELL AUTOMATION, INC. AND MAY NOT BE USED, COPIED OR DISCLOSED TO OTHERS EXCEPT WITH THE AUTHORIZED WRITTEN PERMISSION OF ROCKWELL AUTOMATION INC.

SHEET 3 OF 16

SIZE D | 10004714120 | VER 00

RA_TB_NEMA_D_H_SAP–11/03/16
RA_TB_NEMA_D_H_OEMS–11/03/16

10004714120_0003

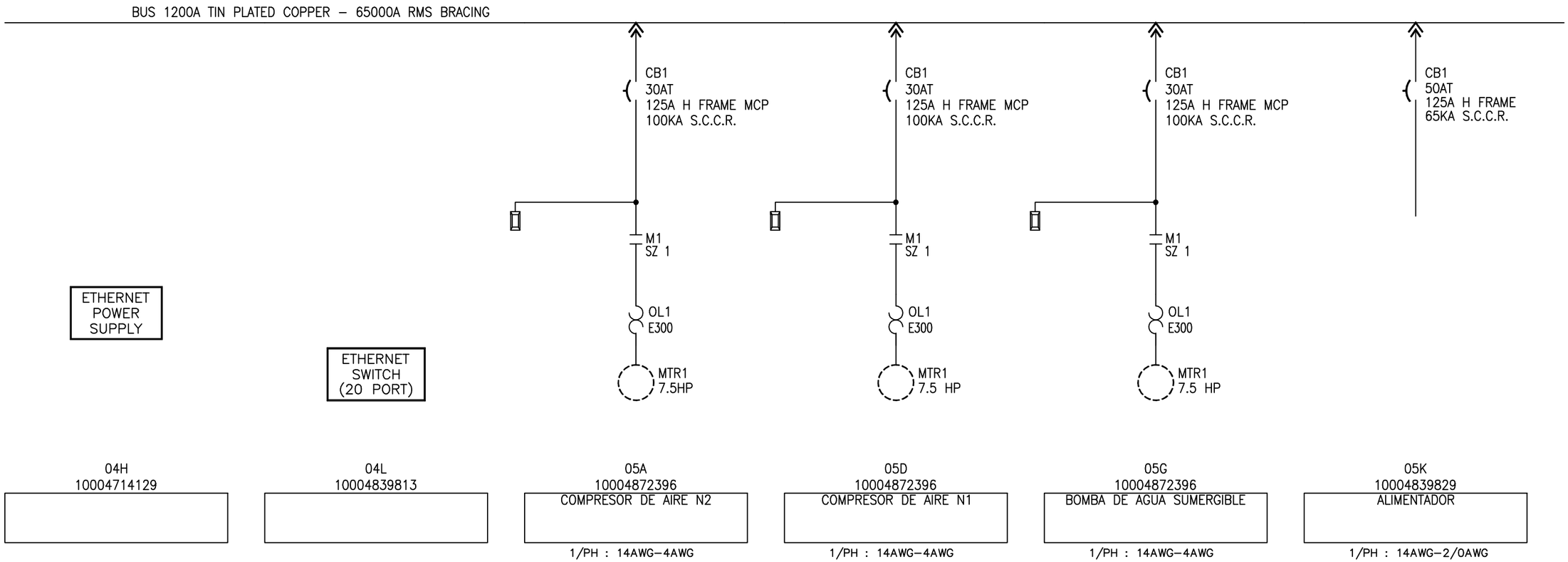

REV	APPROVED	DATE	STAGE
A	C. SERNA	06–05–19	APPROVAL

PROJ. DOC. TYPE: ONE LINE

PROJECT:
INCONTROL – YPFB
TERMINAL SANTA CRUZ REV 3

CUSTOMER:
INCONTROL S.R.L // NIT:196352027
0000518645
000000000035

ORDER–LINE NUMBER:
6504356403–000100

LANG: ENG

Rockwell Automation

ONE LINE SCHEMATIC

DRAWN BY: C. SERNA

DATE: 29–MAY–19

CONFIDENTIAL AND PROPRIETARY INFORMATION.
THIS DOCUMENT CONTAINS CONFIDENTIAL AND PROPRIETARY INFORMATION OF ROCKWELL AUTOMATION, INC. AND MAY NOT BE USED, COPIED OR DISCLOSED TO OTHERS EXCEPT WITH THE AUTHORIZED WRITTEN PERMISSION OF ROCKWELL AUTOMATION INC.

SHEET 4 OF 16

SIZE D | 10004714120 | VER 00

RA_TB_NEMA_D_H_SAP–11/03/16
RA_TB_NEMA_D_H_CENS–11/03/16

10004714120_0004

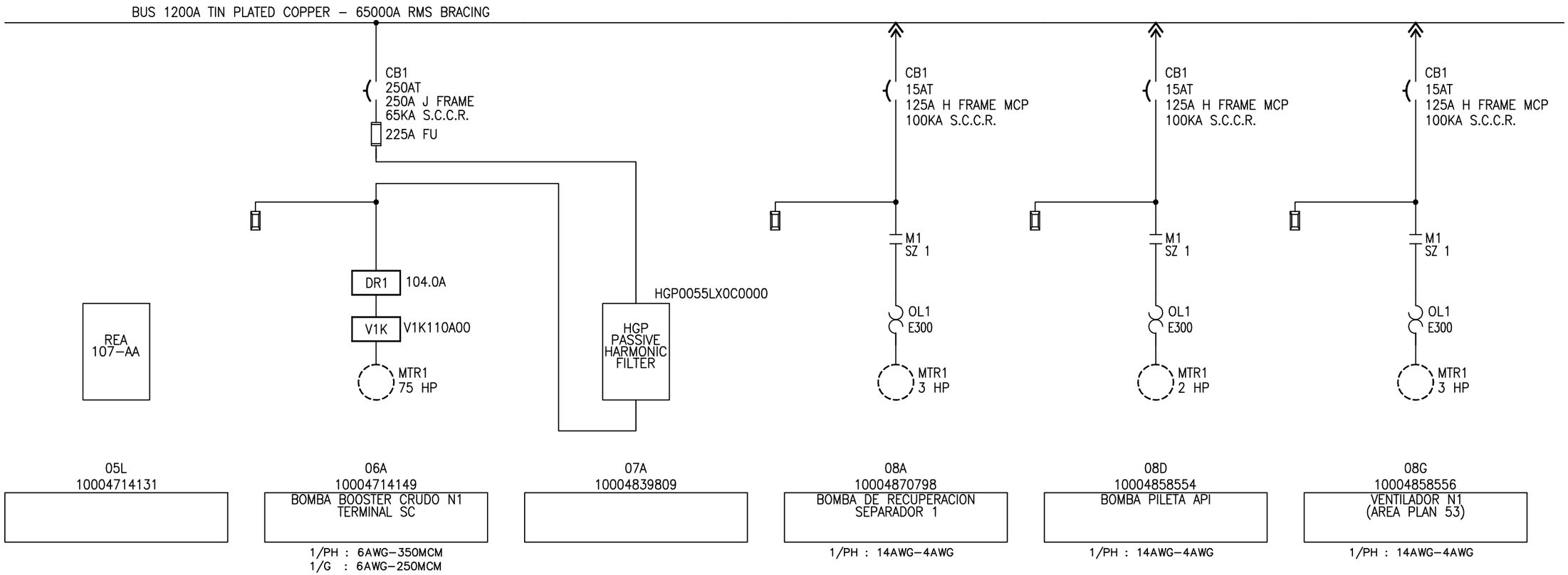

REV	APPROVED	DATE	STAGE
A	C. SERNA	06–05–19	APPROVAL

PROJ. DOC. TYPE: ONE LINE

PROJECT:
INCONTROL – YPFB
TERMINAL SANTA CRUZ REV 3

CUSTOMER:
INCONTROL S.R.L // NIT:196352027
0000518645
000000000035

ORDER–LINE NUMBER:
6504356403–000100

LANG: ENG

Rockwell Automation

ONE LINE SCHEMATIC

DRAWN BY: C. SERNA

DATE: 29–MAY–19

CONFIDENTIAL AND PROPRIETARY INFORMATION.
THIS DOCUMENT CONTAINS CONFIDENTIAL AND PROPRIETARY INFORMATION OF ROCKWELL AUTOMATION, INC. AND MAY NOT BE USED, COPIED OR DISCLOSED TO OTHERS EXCEPT WITH THE AUTHORIZED WRITTEN PERMISSION OF ROCKWELL AUTOMATION INC.

SHEET 5 OF 16

SIZE D | 10004714120 | VER 00

RA_TB_NEMA_D_H_SAP–11/03/16
RA_TB_NEMA_D_H_CENS–11/03/16

10004714120_0005

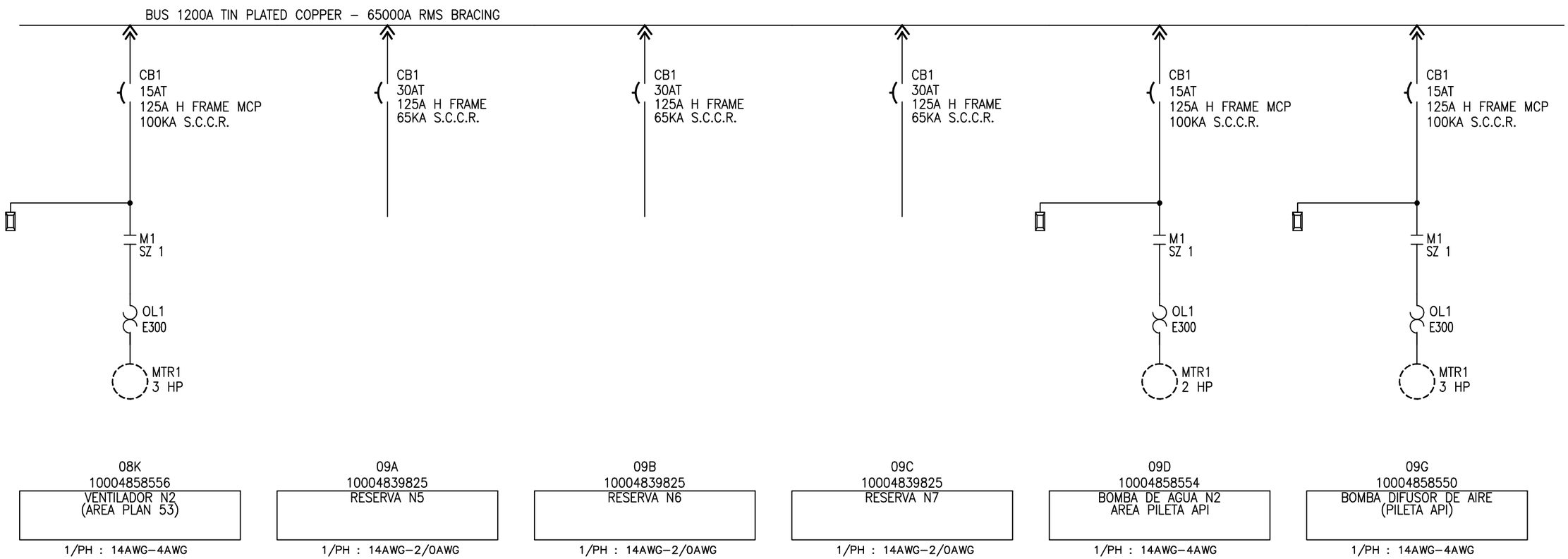

REV	APPROVED	DATE	STAGE
A	C. SERNA	06–05–19	APPROVAL

PROJ. DOC. TYPE: ONE LINE

PROJECT:
INCONTROL – YPFB
TERMINAL SANTA CRUZ REV 3

CUSTOMER:
INCONTROL S.R.L // NIT:196352027
0000518645
000000000035

ORDER–LINE NUMBER:
6504356403–000100

LANG: ENG

Rockwell Automation

ONE LINE SCHEMATIC

DRAWN BY: C. SERNA

DATE: 29–MAY–19

CONFIDENTIAL AND PROPRIETARY INFORMATION.
THIS DOCUMENT CONTAINS CONFIDENTIAL AND PROPRIETARY INFORMATION OF ROCKWELL AUTOMATION, INC. AND MAY NOT BE USED, COPIED OR DISCLOSED TO OTHERS EXCEPT WITH THE AUTHORIZED WRITTEN PERMISSION OF ROCKWELL AUTOMATION INC.

SHEET 6 OF 16

SIZE D | 10004714120 | VER 00

RA_TB_NEMA_D_H_SAP–11/03/16
RA_TB_NEMA_D_H_CEWS–11/03/16

10004714120_0006

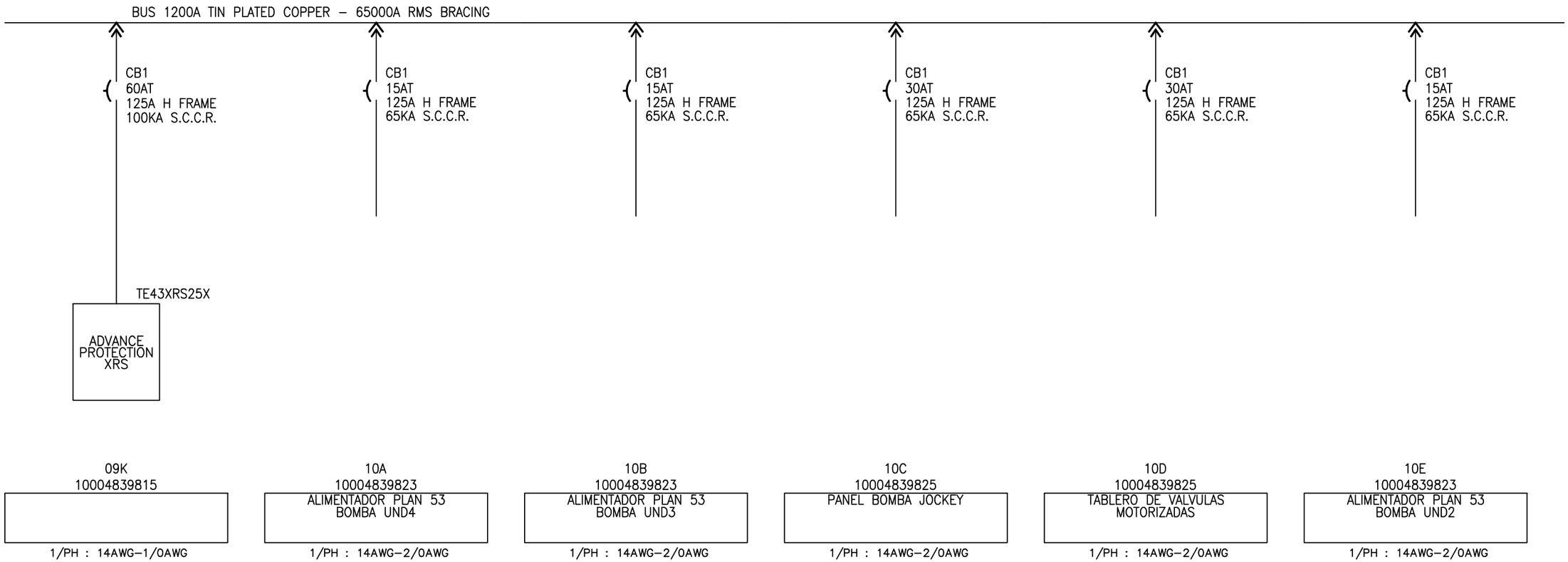

REV	APPROVED	DATE	STAGE
A	C. SERNA	06–05–19	APPROVAL

PROJ. DOC. TYPE: ONE LINE

PROJECT:
INCONTROL – YPFB
TERMINAL SANTA CRUZ REV 3

CUSTOMER:
INCONTROL S.R.L // NIT:196352027
0000518645
000000000035

ORDER–LINE NUMBER:
6504356403–000100

LANG: ENG

Rockwell Automation

ONE LINE SCHEMATIC

DRAWN BY: C. SERNA

DATE: 29–MAY–19

CONFIDENTIAL AND PROPRIETARY INFORMATION.
THIS DOCUMENT CONTAINS CONFIDENTIAL AND PROPRIETARY INFORMATION OF ROCKWELL AUTOMATION, INC. AND MAY NOT BE USED, COPIED OR DISCLOSED TO OTHERS EXCEPT WITH THE AUTHORIZED WRITTEN PERMISSION OF ROCKWELL AUTOMATION INC.

SIZE D | 10004714120 | VER 00

RA_TB_NEMA_D_H_SAP–11/03/16
RA_TB_NEMA_D_H_CEWS–11/03/16

10004714120_0007

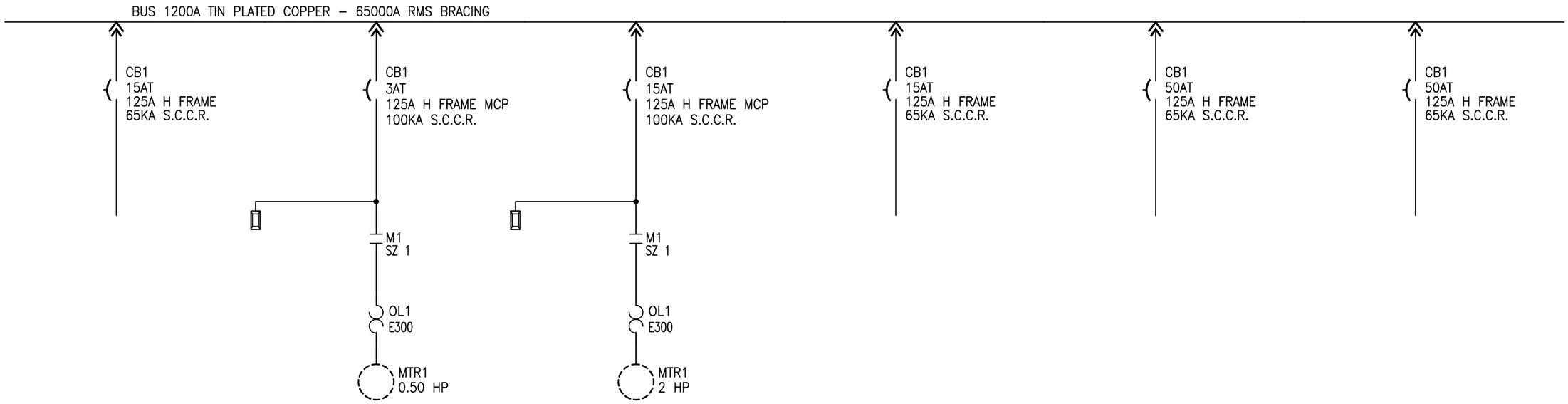

10F	10G	10K	11A	11B	11C
10004839823	10004714135	10004858554	10004839823	10004839829	10004839829
ALIMENTADOR PLAN 53 BOMBA UND1	BOMBA DE RECIRCULACION 1 PLAN 53	BOMBA 1 PLAN 53	ALIMENTACION CASETA DE MEDICION	RESERVA N1	RESERVA N2
1/PH : 14AWG–2/0AWG	1/PH : 14AWG–4AWG	1/PH : 14AWG–4AWG	1/PH : 14AWG–2/0AWG	1/PH : 14AWG–2/0AWG	1/PH : 14AWG–2/0AWG

REV	APPROVED	DATE	STAGE
A	C. SERNA	06–05–19	APPROVAL

PROJ. DOC. TYPE: ONE LINE

PROJECT:
INCONTROL – YPFB
TERMINAL SANTA CRUZ REV 3

CUSTOMER:
INCONTROL S.R.L // NIT:196352027
0000518645
000000000035

ORDER–LINE NUMBER:
6504356403–000100

LANG: ENG

Rockwell Automation

ONE LINE SCHEMATIC

DRAWN BY: C. SERNA

DATE: 29–MAY–19

CONFIDENTIAL AND PROPRIETARY INFORMATION.
THIS DOCUMENT CONTAINS CONFIDENTIAL AND PROPRIETARY INFORMATION OF ROCKWELL AUTOMATION, INC. AND MAY NOT BE USED, COPIED OR DISCLOSED TO OTHERS EXCEPT WITH THE AUTHORIZED WRITTEN PERMISSION OF ROCKWELL AUTOMATION INC.

SHEET 8 OF 16

SIZE D | 10004714120 | VER 00

RA_TB_NEMA_D_H_SAP–11/03/16
RA_TB_NEMA_D_H_CEWS–11/03/16

10004714120_0008

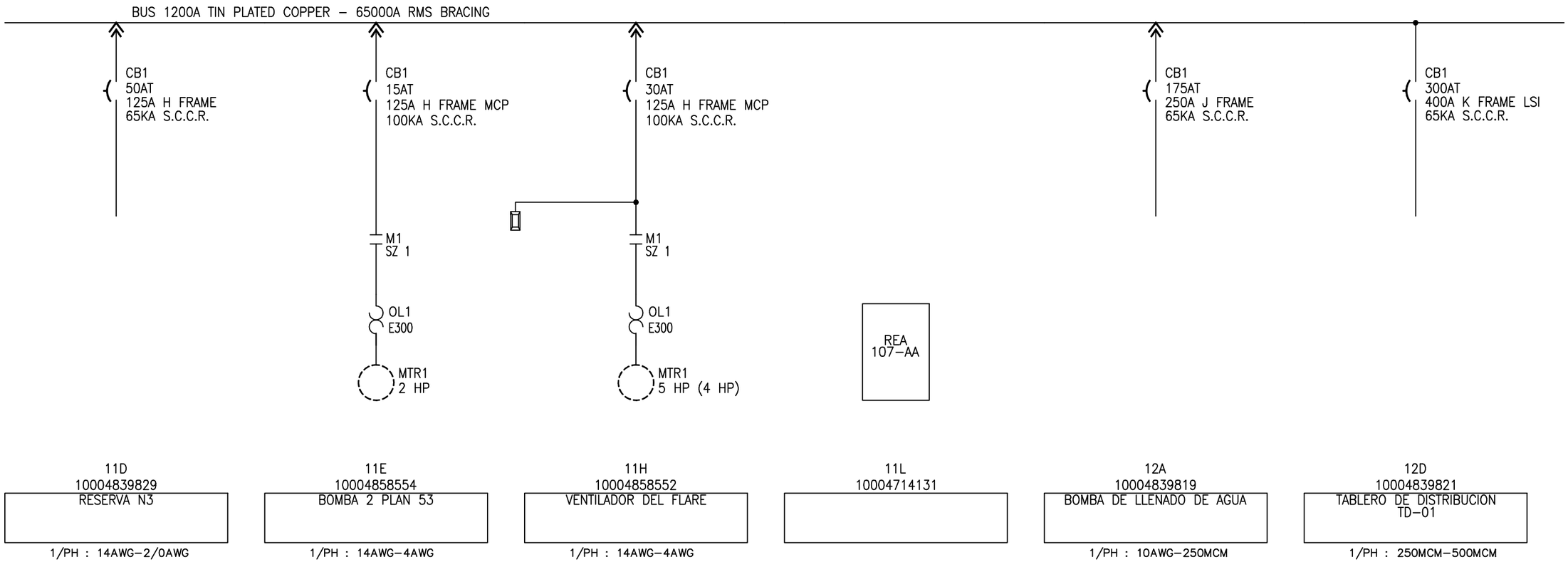

REV	APPROVED	DATE	STAGE
A	C. SERNA	06–05–19	APPROVAL

PROJ. DOC. TYPE: ONE LINE

PROJECT:
INCONTROL – YPFB
TERMINAL SANTA CRUZ REV 3

CUSTOMER:
INCONTROL S.R.L // NIT:196352027
0000518645
000000000035

ORDER–LINE NUMBER:
6504356403–000100

LANG: ENG

Rockwell Automation

ONE LINE SCHEMATIC

DRAWN BY: C. SERNA

DATE: 29–MAY–19

CONFIDENTIAL AND PROPRIETARY INFORMATION.
THIS DOCUMENT CONTAINS CONFIDENTIAL AND PROPRIETARY INFORMATION OF ROCKWELL AUTOMATION, INC. AND MAY NOT BE USED, COPIED OR DISCLOSED TO OTHERS EXCEPT WITH THE AUTHORIZED WRITTEN PERMISSION OF ROCKWELL AUTOMATION INC.

SIZE D | 10004714120 | VER 00

RA_TB_NEMA_D_H_SAP–11/03/16
RA_TB_NEMA_D_H_CEWS–11/03/16

10004714120_0009

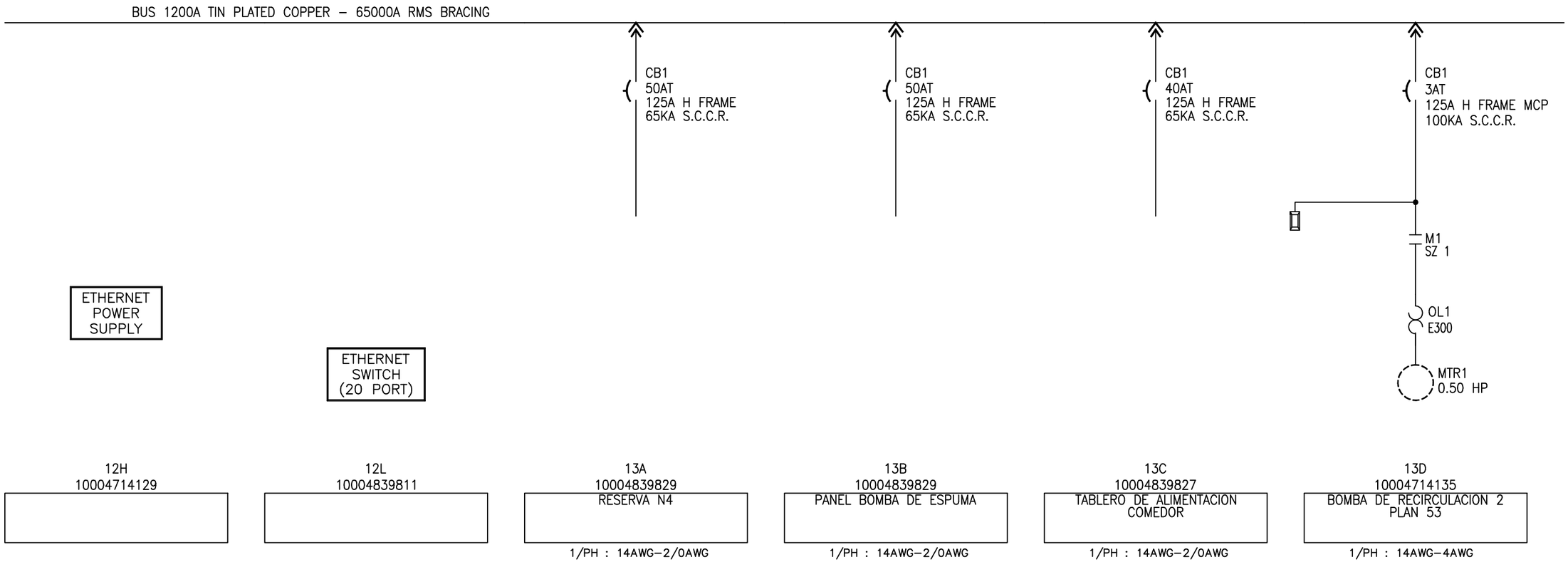

REV	APPROVED	DATE	STAGE
A	C. SERNA	06–05–19	APPROVAL

PROJ. DOC. TYPE: ONE LINE

PROJECT:
INCONTROL – YPFB
TERMINAL SANTA CRUZ REV 3

CUSTOMER:
INCONTROL S.R.L // NIT:196352027
0000518645
000000000035

ORDER–LINE NUMBER:
6504356403–000100

LANG: ENG

Rockwell Automation

ONE LINE SCHEMATIC

DRAWN BY: C. SERNA

DATE: 29–MAY–19

CONFIDENTIAL AND PROPRIETARY INFORMATION.
THIS DOCUMENT CONTAINS CONFIDENTIAL AND PROPRIETARY INFORMATION OF ROCKWELL AUTOMATION, INC. AND MAY NOT BE USED, COPIED OR DISCLOSED TO OTHERS EXCEPT WITH THE AUTHORIZED WRITTEN PERMISSION OF ROCKWELL AUTOMATION INC.

SHEET 10 OF 16

SIZE D | 10004714120 | VER 00

RA_TB_NEMA_D_H_SAP–11/03/16
RA_TB_NEMA_D_H_CEWS–11/03/16

10004714120_0010

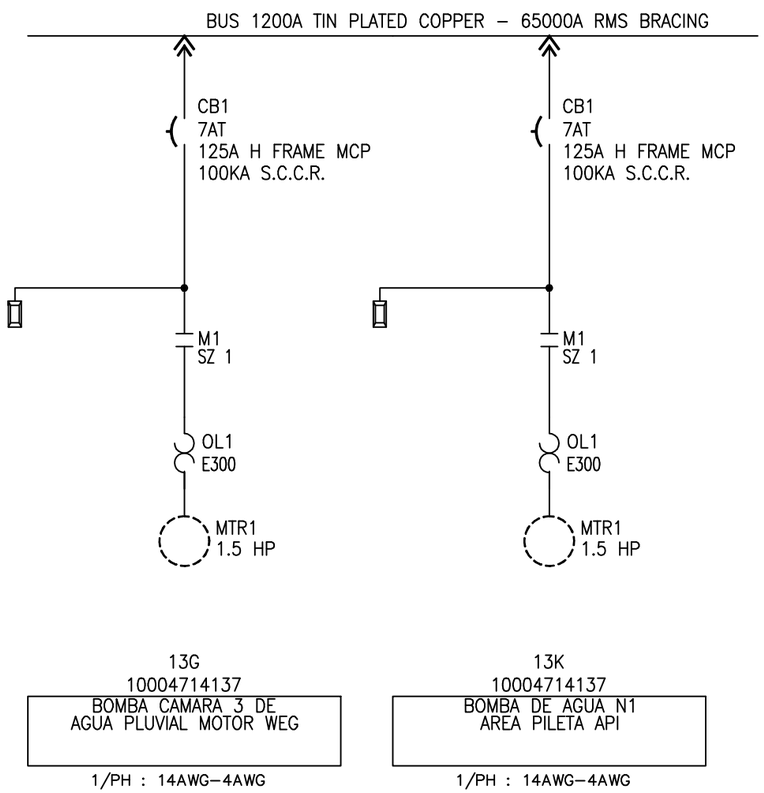

REV	APPROVED	DATE	STAGE
A	C. SERNA	06–05–19	APPROVAL

PROJ. DOC. TYPE: ONE LINE

PROJECT:
INCONTROL – YPFB
TERMINAL SANTA CRUZ REV 3

CUSTOMER:
INCONTROL S.R.L // NIT:196352027
0000518645
000000000035

ORDER–LINE NUMBER:
6504356403–000100

LANG: ENG

Rockwell Automation

ONE LINE SCHEMATIC

DRAWN BY: C. SERNA

DATE: 29–MAY–19

CONFIDENTIAL AND PROPRIETARY INFORMATION.
THIS DOCUMENT CONTAINS CONFIDENTIAL AND PROPRIETARY INFORMATION OF ROCKWELL AUTOMATION, INC. AND MAY NOT BE USED, COPIED OR DISCLOSED TO OTHERS EXCEPT WITH THE AUTHORIZED WRITTEN PERMISSION OF ROCKWELL AUTOMATION INC.

SHEET 11 OF 16

SIZE D | 10004714120 | VER 00

RA_TB_NEMA_D_H_SAP–11/03/16
RA_TB_NEMA_D_H_CEWS–11/03/16

10004714120_0011

VERTICAL WIREWAY ADAPTER PLACEMENT KEY

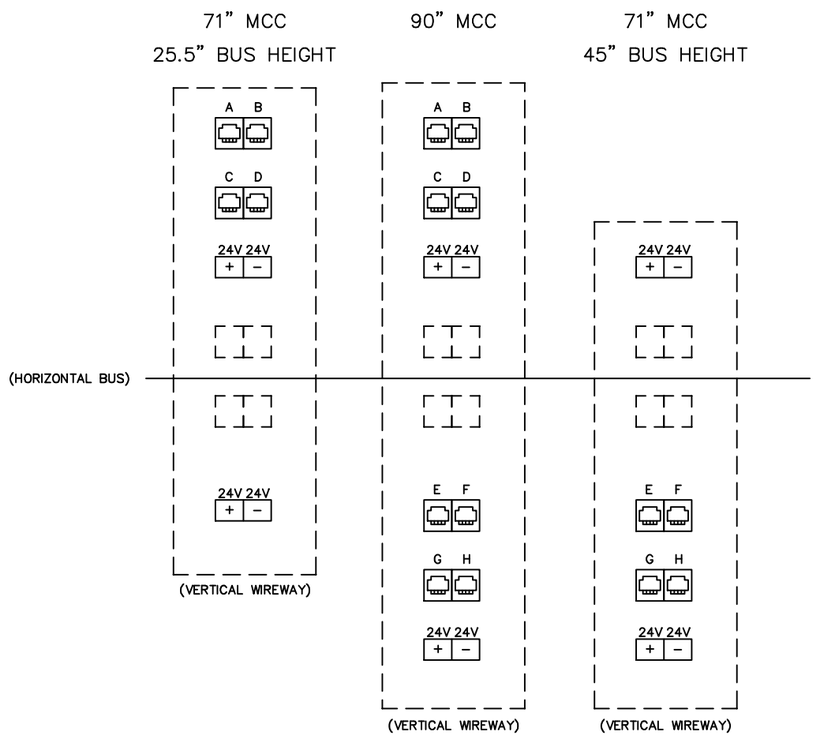

NOTE: PORT LOCATION KEY IS FOR REFERENCE ONLY. ACTUAL LAYOUT MAY DIFFER BASED ON VERTICAL WIREWAY CONFIGURATION AS SHOWN IN NETWORK TABLE.

CABLE LABEL LEGEND

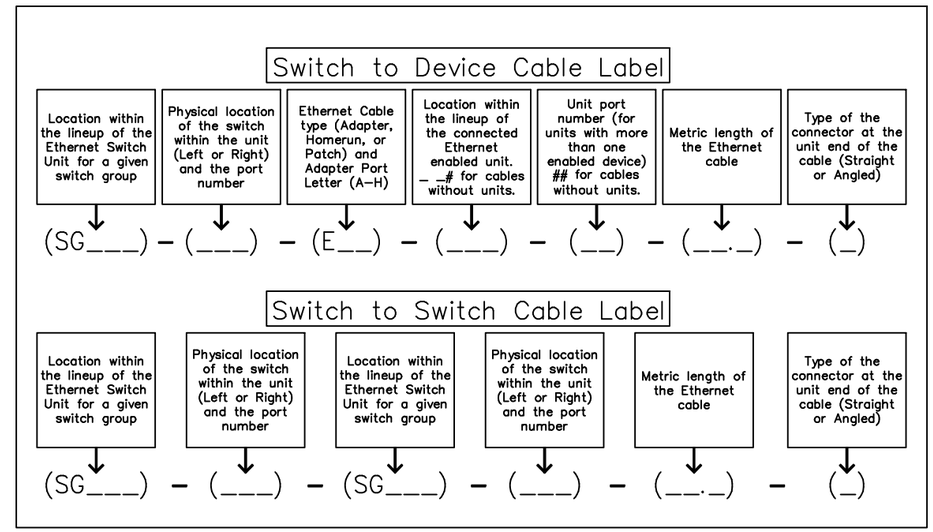

REV	APPROVED	DATE	STAGE
A	C. SERNA	06–05–19	APPROVAL

PROJ. DOC. TYPE: ETHERNET REFERENCE

PROJECT:
INCONTROL – YPFB
TERMINAL SANTA CRUZ REV 3

CUSTOMER:
INCONTROL S.R.L // NIT:196352027
0000518645
000000000035

ORDER–LINE NUMBER:
6504356403–000100

LANG: ENG

Rockwell Automation

ETHERNET REFERENCE PAGE

DRAWN BY: C. SERNA
DATE: 29–MAY–19

CONFIDENTIAL AND PROPRIETARY INFORMATION.
THIS DOCUMENT CONTAINS CONFIDENTIAL AND PROPRIETARY INFORMATION OF ROCKWELL AUTOMATION, INC. AND MAY NOT BE USED, COPIED OR DISCLOSED TO OTHERS EXCEPT WITH THE AUTHORIZED WRITTEN PERMISSION OF ROCKWELL AUTOMATION INC.

SIZE D | 10004714120 | VER 00

RA_TB_NEMA_D_H_SAP–11/03/16
RA_TB_NEMA_D_H_DENIS–11/03/16

10004714120_0012

Ethernet Power Supply

ENET PS Loc	ENET PS Cat #	2–Branch Redundant Unit Loc (1)	2–Branch Redundant Cat # (1)	Max Amp (A)	Left Branch Sections	Left Branch Total Current (A)	Right Branch Sections	Right Branch Total Current (A)
04H	2100–EPS8KB–30THX–79U–112 A–751HS–768C			8.00	1 – 4	1.34	5 – 11	3.40
12H	2100–EPS8KB–30THX–79U–112 A–751HS–768C			8.00	12	1.00	13	1.02

(1) Column is left blank when the 2–branch redundant unit is not utilized.

(2) Customer connection is made to terminal blocks in the corresponding 2–Branch Redundant Unit.

REV	APPROVED	DATE	STAGE
A	C. SERNA	06–05–19	APPROVAL

PROJ. DOC. TYPE: POWER SUPPLIES

PROJECT:
INCONTROL – YPFB
TERMINAL SANTA CRUZ REV 3

CUSTOMER:
INCONTROL S.R.L // NIT:196352027
0000518645
000000000035

ORDER–LINE NUMBER:
6504356403–000100

LANG: ENG

Rockwell Automation

ETHERNET POWER SUPPLIES

DRAWN BY: C. SERNA

DATE: 29–MAY–19

CONFIDENTIAL AND PROPRIETARY INFORMATION.
THIS DOCUMENT CONTAINS CONFIDENTIAL AND PROPRIETARY INFORMATION OF ROCKWELL AUTOMATION, INC. AND MAY NOT BE USED, COPIED OR DISCLOSED TO OTHERS EXCEPT WITH THE AUTHORIZED WRITTEN PERMISSION OF ROCKWELL AUTOMATION INC.

SIZE D | 10004714120 | VER 00

Ethernet Switch		Switch-to-Adapter Ethernet Cable (1)				Manufacturing Code (2)	Device Ethernet Cable		Device				
Switch Data	Port (3)	Adapter Section Loc.	Adapter Port Loc.	Label	Length (m)		Label	Length (m)	Unit Loc.	Type	IP Address	Subnet Mask	Current Draw (A)
Uplink ID: 01 Switch Section: 4 Switch Location: Unit 04L Catalog Number: 1783-BMS20CL IP Address: 192.168.1.3 Subnet Mask: 255.255.255.0 Current Draw (A) 1.00	1					42B	SG04L-R01-EH-02A-01-3.5-S	3.5	02A	PowerFlex755	192.168.1.4	255.255.255.0	0.00
	2					23B	SG04L-R02-EH-04B-01-2.5-S	2.5	04B	E300	192.168.1.5	255.255.255.0	0.34
	3					23B	SG04L-R03-EH-04E-01-2.5-A	2.5	04E	PM5000	192.168.1.1	255.255.255.0	0.00
	4					23B	SG04L-R04-EH-04E-02-2.5-S	2.5	04E	PM5000	192.168.1.2	255.255.255.0	0.00
	5					43B	SG04L-R05-EH-05A-01-3.5-S	3.5	05A	E300	192.168.1.6	255.255.255.0	0.00
	6					43B	SG04L-R06-EH-05D-01-3.0-S	3.0	05D	E300	192.168.1.7	255.255.255.0	0.00
	7					43B	SG04L-R07-EH-05G-01-2.5-S	2.5	05G	E300	192.168.1.8	255.255.255.0	0.00
	8					78B	SG04L-R08-EH-06A-01-4.0-S	4.0	06A	PowerFlex755	192.168.1.9	255.255.255.0	0.00
	9					118B	SG04L-R09-EH-08A-01-5.5-S	5.5	08A	E300	192.168.1.10	255.255.255.0	0.34
	10					118B	SG04L-R10-EH-08D-01-5.0-S	5.0	08D	E300	192.168.1.11	255.255.255.0	0.34
	11					118B	SG04L-R11-EH-08G-01-4.5-S	4.5	08G	E300	192.168.1.12	255.255.255.0	0.34
	12					118B	SG04L-R12-EH-08K-01-4.0-S	4.0	08K	E300	192.168.1.13	255.255.255.0	0.34
	13					138B	SG04L-R13-EH-09D-01-5.5-S	5.5	09D	E300	192.168.1.14	255.255.255.0	0.34
	14					138B	SG04L-R14-EH-09G-01-5.0-S	5.0	09G	E300	192.168.1.15	255.255.255.0	0.34
	15												
	16												
	17												
	18												
	19									Customer Uplink			
	20					---	SG04L-R20-SG12L-R19-5.5-S	5.5	12L	SW to SW	See Switch Info	See Switch Info	---
Uplink ID: 01 Switch Section: 12 Switch Location: Unit 12L Catalog Number: 1783-BMS20CL IP Address: 192.168.1.16 Subnet Mask: 255.255.255.0 Current Draw (A) 1.00	1					42B	SG12L-R01-EH-10G-01-2.5-S	2.5	10G	E300	192.168.1.17	255.255.255.0	0.34
	2					42B	SG12L-R02-EH-10K-01-2.0-S	2.0	10K	E300	192.168.1.18	255.255.255.0	0.34
	3					22B	SG12L-R03-EH-11E-01-2.0-S	2.0	11E	E300	192.168.1.19	255.255.255.0	0.34
	4					22B	SG12L-R04-EH-11H-01-1.6-S	1.6	11H	E300	192.168.1.20	255.255.255.0	0.34
	5					43B	SG12L-R05-EH-13D-01-3.0-S	3.0	13D	E300	192.168.1.21	255.255.255.0	0.34
	6					43B	SG12L-R06-EH-13G-01-2.5-S	2.5	13G	E300	192.168.1.22	255.255.255.0	0.34
	7					43B	SG12L-R07-EH-13K-01-2.0-S	2.0	13K	E300	192.168.1.23	255.255.255.0	0.34
	8												
	9												
	10												
	11												
	12												
	13												
	14												
	15												
	16												
	17												
	18												
	19					---	SG04L-R20-SG12L-R19-5.5-S	5.5	04L	SW to SW	See Switch Info	See Switch Info	---
	20												

(1) This column group details an Ethernet cable that connects a switch port to a vertical wireway adapter. If this column group is blank, the switch port connects directly to the device utilizing the cable called out in the "Device Ethernet Cable" section.

(2) For Rockwell Automation Manufacturing Purposes Only

(3) Some Stratix 5700 Ethernet switch ports leverage gigabit Ethernet connections and are shown on the MCC network table and network diagram with a "G" located before the switch port number. Consult the Stratix 5700 Technical Data (publication 1783-TD001) for more information on the physical Stratix 5700 port representations.

REV	APPROVED	DATE	STAGE
A	C. SERNA	06-05-19	APPROVAL

PROJ. DOC. TYPE: NETWORK TABLE

PROJECT:
INCONTROL - YPFB
TERMINAL SANTA CRUZ REV 3

CUSTOMER:
INCONTROL S.R.L // NIT:196352027
0000518645
000000000035

ORDER-LINE NUMBER:
6504356403-000100

LANG: ENG

Rockwell Automation

NETWORK TABLE

DRAWN BY: C. SERNA

DATE: 29-MAY-19

CONFIDENTIAL AND PROPRIETARY INFORMATION.
THIS DOCUMENT CONTAINS CONFIDENTIAL AND PROPRIETARY INFORMATION OF ROCKWELL AUTOMATION, INC. AND MAY NOT BE USED, COPIED OR DISCLOSED TO OTHERS EXCEPT WITH THE AUTHORIZED WRITTEN PERMISSION OF ROCKWELL AUTOMATION INC.

SIZE D | 10004714120 | VER 00

RA_TB_NEMA_D_H_SAP-11/03/16
RA_TB_NEMA_D_H_CENS-11/03/16

10004714120_0014

REV	APPROVED	DATE	STAGE
A	C. SERNA	06-05-19	APPROVAL

PROJ. DOC. TYPE: NETWORK DIAGRAM

PROJECT:
INCONTROL - YPFB
TERMINAL SANTA CRUZ REV 3

CUSTOMER:
INCONTROL S.R.L // NIT:196352027
0000518645
000000000035

ORDER-LINE NUMBER:
6504356403-000100

LANG: ENG

Rockwell Automation

ETHERNET DIAGRAM

DRAWN BY: C. SERNA

DATE: 29-MAY-19

CONFIDENTIAL AND PROPRIETARY INFORMATION.
THIS DOCUMENT CONTAINS CONFIDENTIAL AND PROPRIETARY INFORMATION OF ROCKWELL AUTOMATION, INC. AND MAY NOT BE USED, COPIED OR DISCLOSED TO OTHERS EXCEPT WITH THE AUTHORIZED WRITTEN PERMISSION OF ROCKWELL AUTOMATION INC.

SIZE D | 10004714120 | VER 00

RA_TB_NEMA_D_H_SAP-11/03/16
RA_TB_NEMA_D_H_CEWS-11/03/16

10004714120_0015

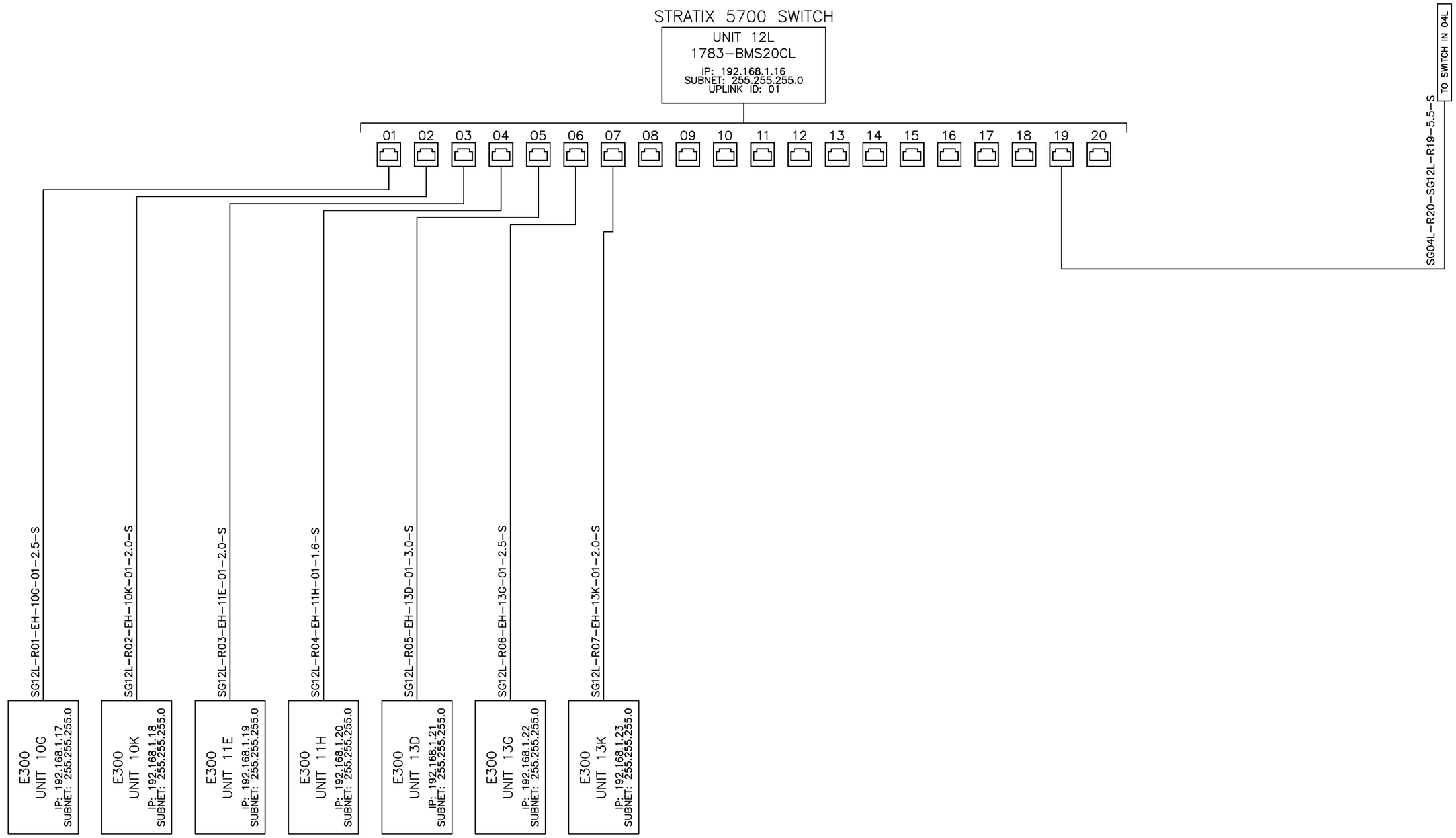

REV	APPROVED	DATE	STAGE
A	C. SERNA	06-05-19	APPROVAL

PROJ. DOC. TYPE: NETWORK DIAGRAM

PROJECT:
INCONTROL - YPFB
TERMINAL SANTA CRUZ REV 3

CUSTOMER:
INCONTROL S.R.L // NIT:196352027
0000518645
000000000035

ORDER-LINE NUMBER:
6504356403-000100

LANG: ENG

Rockwell Automation

ETHERNET DIAGRAM

DRAWN BY: C. SERNA

DATE: 29-MAY-19

CONFIDENTIAL AND PROPRIETARY INFORMATION.
THIS DOCUMENT CONTAINS CONFIDENTIAL AND PROPRIETARY INFORMATION OF ROCKWELL AUTOMATION, INC. AND MAY NOT BE USED, COPIED OR DISCLOSED TO OTHERS EXCEPT WITH THE AUTHORIZED WRITTEN PERMISSION OF ROCKWELL AUTOMATION INC.

SHEET 16 OF 16

SIZE D | 10004714120 | VER 00

RA_TB_NEMA_D_H_SAP-11/03/16
RA_TB_NEMA_D_H_CEWS-11/03/16

10004714120_0016